Stretch Wrapper CTA 400

For semi automatic arm wrapping

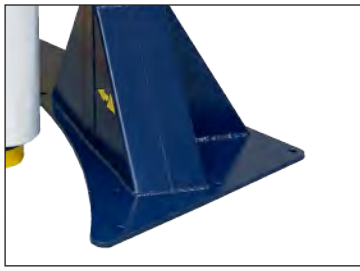

CYKLOP
INTERNATIONAL

Stretch Wrapper CTA 400

Overview and dimensions

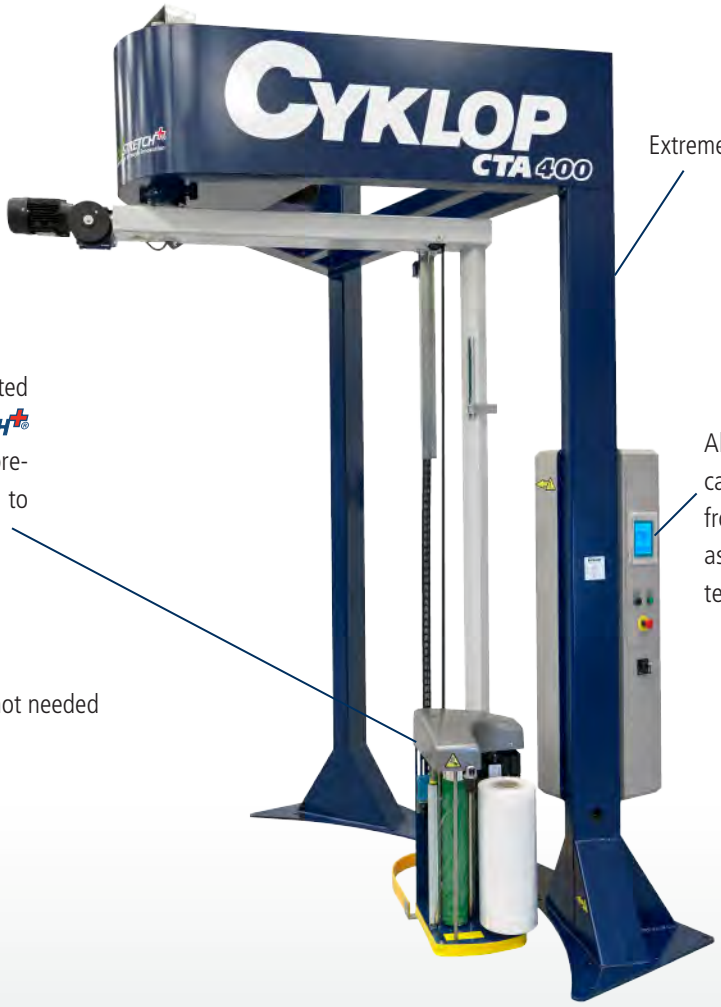

Quiet operation

Extremely rigid chassis

Cyklop's patented POWER ECOSTRETCH+® with adjustable pre-stretch system up to 400%

All functions of the CTA 400 can be manually operated from the touch panel such as film patterns and film tensions.

Air supply not needed

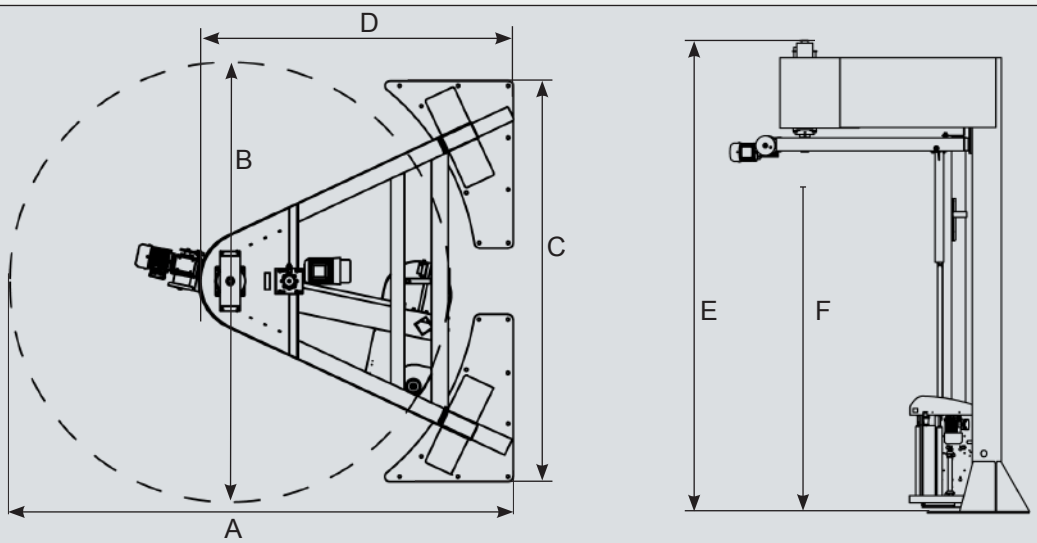

Dim (mm)	A	B	C	D	E	F
Standard	3100	2800	2397	2459	3573	2400

Weight, standard: 690 kg (Weight can vary depending on options).

Stretch Wrapper CTA 400
Specification

Machine	Rotation speed	max 10,5 r/min
Power	Supply Protection	3 x 400 V + N + PE, 50 Hz IP51
Pallet Goods	Max size (length x width) Highest goods height incl pallet	1200 x 1200 mm 2400 mm (standard machine)
Stretch Film	Core diameter Outer diameter, max Film width, max Film thickness	76 mm 250 mm 500 mm 15-35 my
Floor mounting	Min. concrete thickness	150 mm
CE -mark	(EN 60204)	

Key features
- Floor mounted model
- Easy change of all program parameters and settings.
- 9 individual programs can be stored and each program can be named.
- Quiet operation
- All functions of the CTA 400 can be manually operated such as film patterns and film tensions.
- Extremely rigid chassis
- Unlimited load weight capacity

Stretch Wrapper CTA 400
Options

➤ Galvanized chassi
➤ Extended chassi - **CTA 400 BIG**

Stretch Wrapper CTA 400

Cyklop´s CTA 400 rotary arm machine is a floor mounted stretch wrapper. Levels of automation based on long experience, extension possibilities and a large number of settings give this new series of stretch wrappers a high profit-ability through optimal adaptation to every need. These properties guarantee a good protection and transport packaging as well as the lowest possible material cost, i e a low consumption of stretch film.

Easy to operate

- Controls are easy to find and understand.
- Film roll change fast and simple.
- Automatic load height sensor.
- No air supply needed.

Saves money

- Pre-stretch ratio is now adjustable up to 400%. Patent approved system, POWER ECOSTRETCH®
- The chosen prestretch ratio stays constant, which guarantees a consistent low film, consumption, load after load.
- Film carriage speed is individually adjustable to minimize film overlap.
- Motorized prestretch device minimizes film consumption and protects delicate goods.

Consistent packaging result

- Flexible setting possibilities enable optimum packaging for a variety of goods.
- The film tension is automatically controlled which gives an even cover around the goods.
- Several standard programs are available, e g with top sheet for protection against water.
- 3 programs are factory preset.
- The memory can contain 9 programs, which all can be programmed with individual parameters.

Key features:

- Floor mounted model
- Easy change of all program parameters and settings.
- 9 individual programs can be stored and each program can be named.
- Quiet operation
- All functions of the GL 400 can be manually operated such as film patterns and film tensions.
- Extremely rigid chassis
- Unlimited load weight capacity

The display will show the following information:

- Film consumption for the last pallet.
- Total number of wrapped pallets after latest reset.
- Film cost per pallet.

NEWS! Touch display with advanced functions

The graphic interface is developed for simple change of the program parameters as well as for easy access of information. Viewing of amount of film used and the price per pallets wrapped.

CYKLOP INTERNATIONAL

This folder may not be copied or the content in any way be changed. All rights reserved. © Copyright by Cyklop Teknik – Burseryd 2011 - PBE - CTA 400 4P